Capacitance

Q1.

A capacitor is charged by a battery as shown in the circuit diagram.

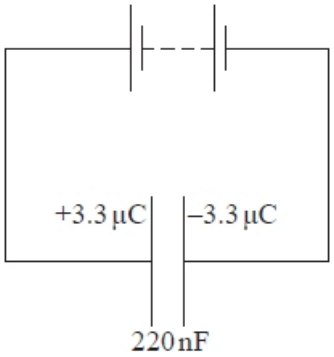

(a) Calculate the e.m.f. of the battery and the energy stored in the charged capacitor.

(4)

.....

.....

.....

.....

.....

E.m.f. = ...

Energy = ...

(b) The capacitor is disconnected from the battery and discharged through a 20 MΩ resistor.

Calculate the time taken for 80% of the charge on the capacitor to discharge through the resistor.

(3)

.....

.....

.....

.....

.....

.....

.....

Time taken = ...

(c) Use an equation to explain whether the time taken for the capacitor to lose half its energy is greater or less than the time taken to lose half its charge.

(3)

.....

.....

.....

.....

.....

.....

(d) A student carries out an experiment to record data so that she can plot a graph of potential difference against time as the capacitor discharges.

State **two** advantages of using a datalogger rather than a voltmeter and stopwatch to record this data.

(2)

.....

.....

.....

.....

(Total for question = 12 marks)

Q2.

A capacitor is discharged through a resistor of resistance 900 Ω. The graph shows how the charge on the capacitor decreases with time.

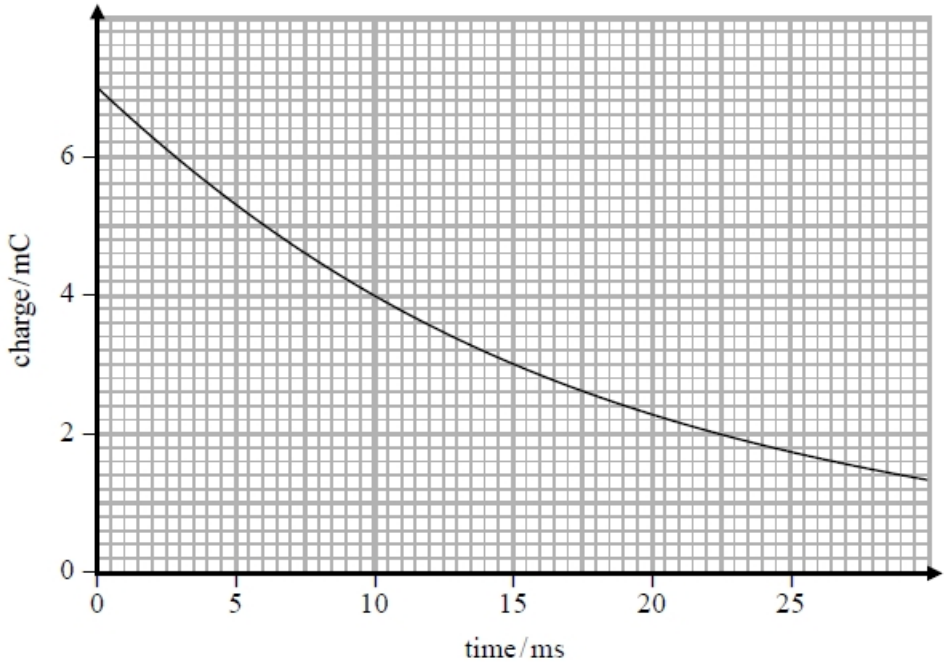

Calculate the capacitance of the capacitor.

(4)

.....

.....

.....

.....

.....

.....

Capacitance = ...

(Total for question = 4 marks)

Q3.

A defibrillator is an electrical device designed to deliver a brief electrical signal to restore a normal rhythm to the heart. Electrodes are attached to the chest of a patient and a charged capacitor is discharged through the chest cavity.

In one defibrillator a 56 μF capacitor is charged by a potential difference of 2500 V. During the discharge of the capacitor the resistance between the electrodes is 45 Ω.

Show that the time taken for 99% of the discharge to take place is about 12 ms and hence calculate the average current delivered by the defibrillator during this period.

(6)

.....

.....

.....

.....

.....

.....

.....

.....

.....

.....

.....

.....

.....

.....

.....

.....

.....

Average current = ...

(Total for question = 6 marks)

Q4.

Some mobile phones have a capacitor touch screen made up of a sheet of glass with a thin metallic coating. The screen is charged and when it is touched some of the charge is transferred to the user. This causes a drop in electrical potential at the point where the screen is touched.

A capacitor is charged by connecting it across a battery and then discharged through a resistor. In the case of the touch screen the user provides a discharge resistance of about 900 Ω.

Explain how the capacitor discharges.

(3)

.....

.....

.....

.....

.....

.....

(Total for question = 3 marks)

Q5.

A capacitor of 50 μF is charged to a potential difference of 12 V.

The energy stored on the charged capacitor in joules is given by

☐ **A** $0.5 \times 50 \times 10^{-6} \times 12^2$

☐ **B** $\frac{0.5 \times 50 \times 10^{-6}}{12^2}$

☐ **C** $\frac{0.5 \times 12^2}{50 \times 10^{-6}}$

☐ **D** $0.5 \times (50 \times 10^{-6})^2 \times 12$

(Total for question = 1 mark)

Q6.

A capacitor is connected to a power supply and charged to a potential difference V_0.

The graph shows how the potential difference V across the capacitor varies with the charge Q on the capacitor.

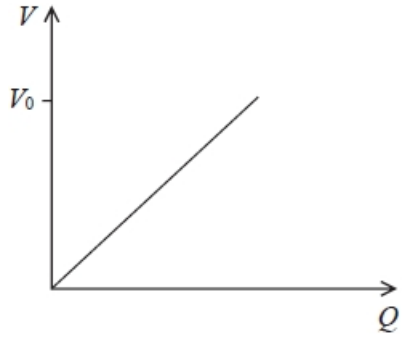

At a potential difference V_0 a small charge ΔQ is added to the capacitor. This results in a small increase in potential difference ΔV across the capacitor.

Which of the following gives the approximate increase in energy stored on the capacitor due to this extra charge?

☒ **A** $\Delta V \times \Delta Q$

☒ **B** $\frac{\Delta V \times \Delta Q}{2}$

☒ **C** $V_0 \times \Delta Q$

☒ **D** $\frac{V_0 \times \Delta Q}{2}$

(Total for question = 1 mark)

Q7.

* Cameras usually have an inbuilt flash bulb that can be used to take photographs in poor light conditions. As a photograph is taken, the bulb should be able to produce a bright flash of light for up to 4 ms.

A capacitor can be used along with a battery as a power supply for the flash bulb. The flow diagram shows a possible arrangement.

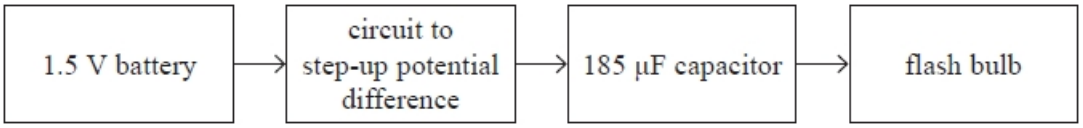

Comment on the suitability of using this capacitor arrangement as a power supply rather than connecting the bulb directly to the battery.

A typical flash bulb has a resistance of 6 Ω.

(6)

.....

.....

.....

.....

.....

.....

.....

.....

.....

.....

.....

.....

(Total for question = 6 marks)

Q8.

A circuit consists of a battery of e.m.f. 5 V and negligible internal resistance, a switch, a 100 Ω resistor and an uncharged 50 μF capacitor.

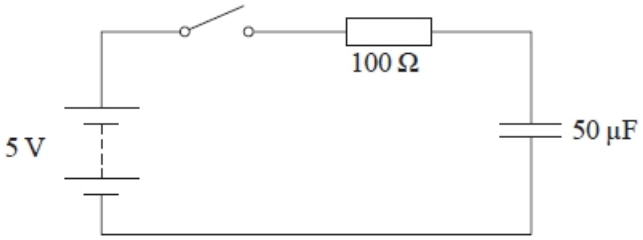

Describe what happens to the potential difference across the resistor and the potential difference across the capacitor after the switch is closed.

(4)

.....

.....

.....

.....

.....

.....

.....

.....

(Total for question = 4 marks)

Q9.

A capacitor of capacitance *C* is discharged through a resistor of resistance *R*. The initial discharge current is I_0.

Which of the following expressions gives the current after a time equal to *RC*?

☐ **A** $\frac{I_0}{e}$

☐ **B** $\frac{I_0}{2}$

☐ **C** $I_0 e^{-RC}$

☐ **D** $I_0 \ln \frac{1}{e}$

(Total for question = 1 mark)

Q10.

A parallel plate capacitor consists of a thin layer of insulator of thickness *d* between two plates of conducting material of area *A*.

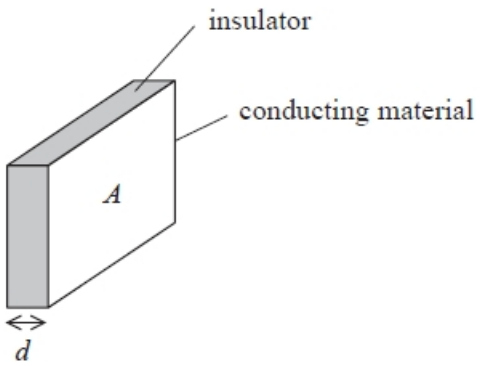

The capacitor has a capacitance 0.1 μF and is charged to a p.d. of 100 V by connecting it to an electrical supply.

The capacitor is then disconnected from the supply and the p.d. between the two plates slowly decreases. This is because the insulator is not perfect and a small charge can flow through it.

The graph shows how the p.d. varies with time.

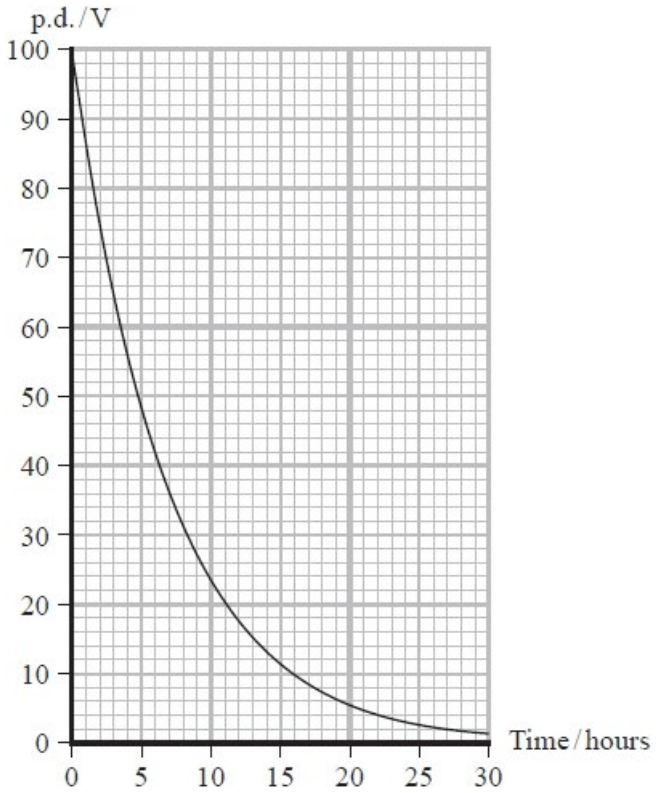

The insulator is a type of plastic and should have a resistivity greater than 10^{14} Ω m.

Deduce whether the plastic used in this capacitor has a resistivity greater than this value.

$A = 5.6 \times 10^{-3}$ m^2

$d = 0.6 \times 10^{-6}$ m

(5)

.....

.....

.....

.....

.....

.....

.....

.....

.....

.....

.....

(Total for question = 5 marks)

Q11.

A 'Gauss gun' can be made from five ball bearings of equal mass and two magnets, as shown.

Pairs of ball bearings are placed to the right of two strong magnets. A single ball bearing is released from the left, as shown. The ball bearing is attracted to, and collides with, the first magnet. This and all subsequent collisions can be assumed to be elastic.

A student set up the apparatus shown to measure the speed of the last ball bearing. The 'Gauss gun' was placed at the end of a bench, so that the ball bearing left the gun and broke two strips of metal foil which formed part of an electric circuit.

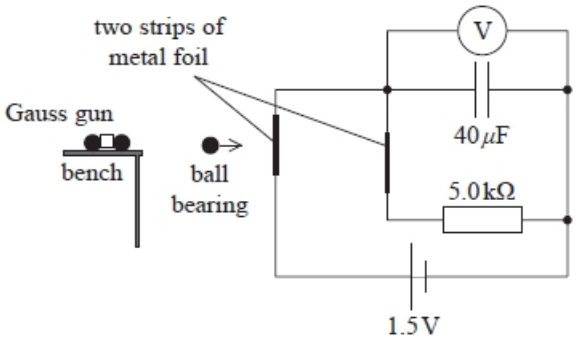

As the ball bearing left the gun, it broke the first foil strip at its centre so that the capacitor started to discharge. When the ball bearing broke the second foil strip the capacitor discharge stopped.

(i) Calculate the energy stored in the capacitor when it was fully charged.

(2)

.....

.....

.....

.....

Energy stored = ...

(ii) The voltmeter reading halved in the time taken for the ball bearing to travel between the two foil strips.

Show that the time taken for the ball bearing to travel between the two foil strips was about 0.1 s.

(2)

.....

.....

.....

.....

(iii) The two foil strips were 0.50 m apart.

Calculate the horizontal velocity of the ball bearing.

(2)

.....

.....

.....

.....

Horizontal velocity = ...

(iv) The student positioned the second foil strip with its centre 8.0 cm lower than the centre of the first foil strip.

Deduce whether the ball bearing broke the second foil strip at its centre.
Assume the ball bearing was travelling horizontally as it broke the first foil strip.

(2)

.....

.....

.....

.....

.....

.....

(Total for question = 8 marks)

Q12.

A circuit consists of a battery of e.m.f. 5 V and negligible internal resistance, a switch, a 100 Ω resistor and an uncharged 50 μF capacitor.

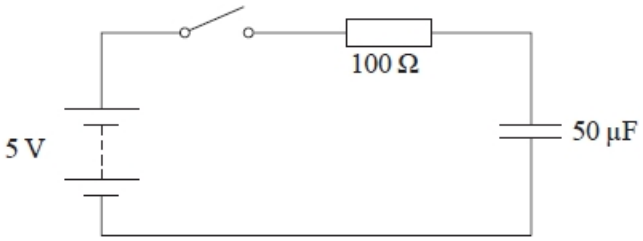

The battery and switch are replaced by a signal generator providing a square wave output of peak potential difference 5 V. The signal generator has negligible internal resistance.

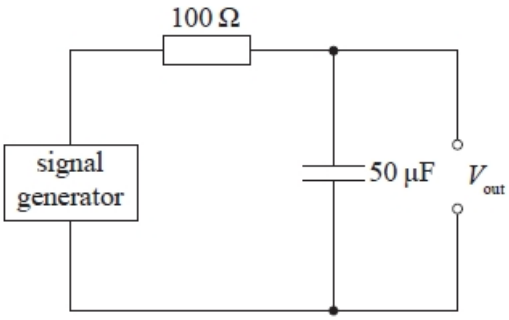

The graph shows the square wave output of the signal generator. The frequency of the square wave is 20 Hz.

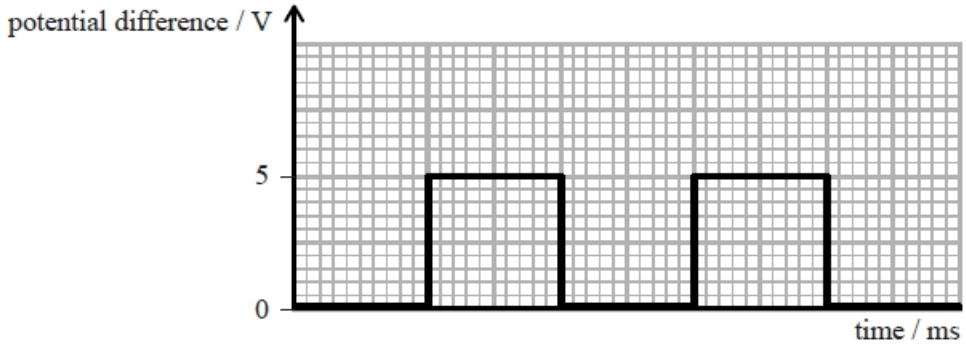

On the graph add values to the time axis and sketch a graph of the potential difference, V_{out}, across the capacitor for two cycles of the square wave. Assume the capacitor is initially uncharged.

(5)

.....

.....

.....

.....

.....

(Total for question = 5 marks)

Q13.

Power supplies provide either alternating or direct currents and potential differences.

It is possible to convert alternating currents and p.d.s, to direct currents and p.d.s using diodes.

The power supply provides an input V_{in} to the circuit shown. The circuit includes four diodes D_1, D_2, D_3 and D_4 and a resistor R. The circuit produces an output potential difference V_{out} .

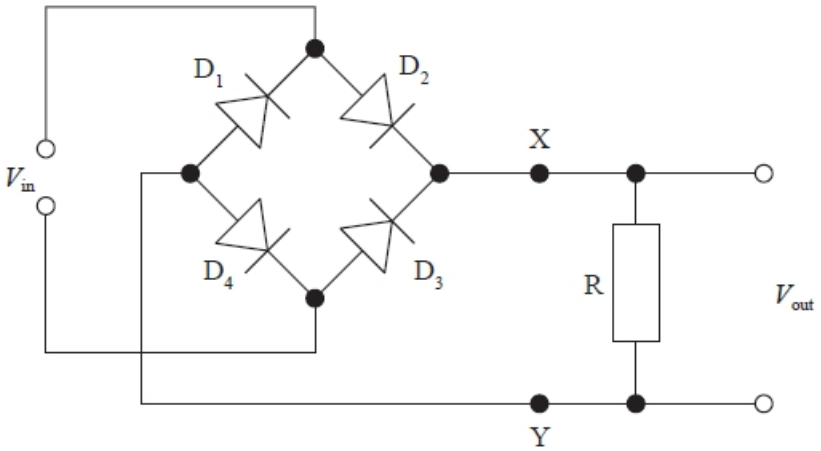

A graph of V_{in} against time and a corresponding graph of V_{out} against time are shown below.

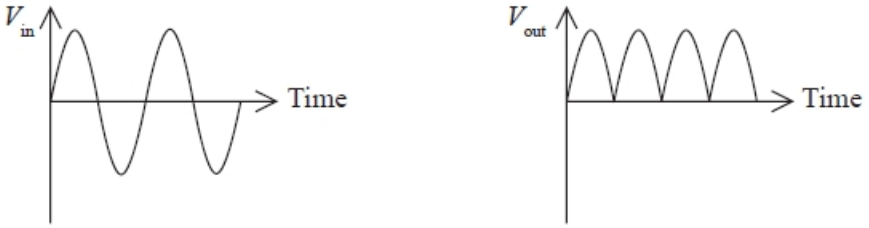

(i) Explain the operation of this circuit. Your answer should refer to D_1, D_2, D_3 and D_4.

(3)

.....

.....

.....

.....

.....

.....

(ii) A capacitor is added between points X and Y in the circuit.

The new graph of V_{out} against time is shown below.

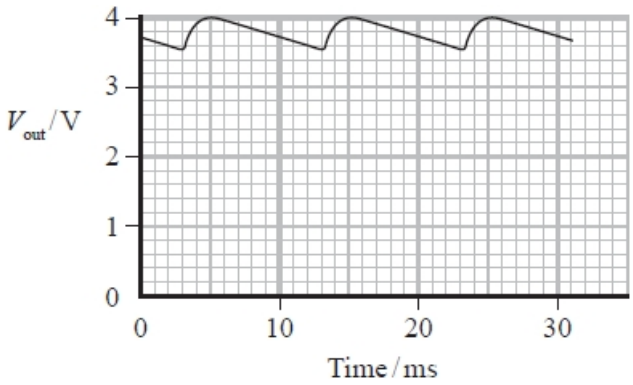

Determine a value for the capacitance of the capacitor.

resistance of R = 2.2 kΩ

(3)

.....

.....

.....

.....

.....

.....

.....

Capacitance = ...

(Total for question = 6 marks)

Q14.

The properties of capacitors make them useful in timing circuits.

The following circuit is used to provide an input Y to an integrated circuit.

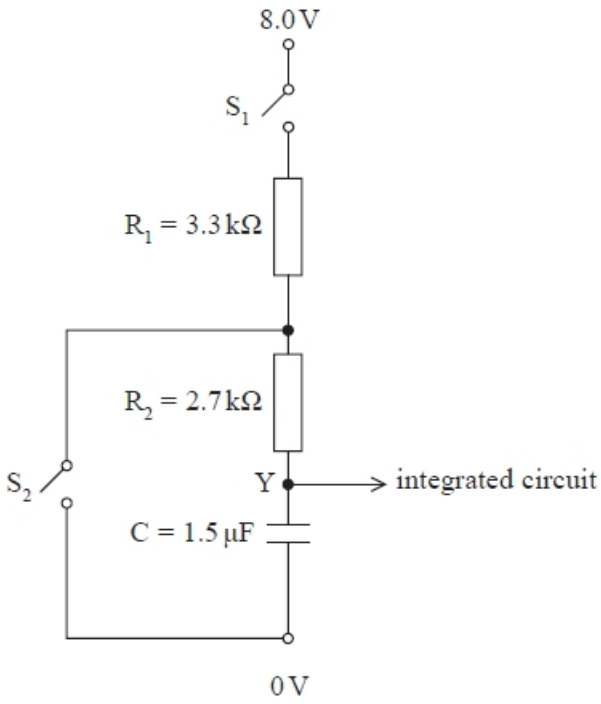

When the potential at Y is 8.0 V, the switch S_2 is closed.

(i) Calculate the time taken for the potential at Y to decrease to 2.0 V.

(3)

.....

.....

.....

.....

Time taken = ...

(ii) Calculate the energy stored on the capacitor when the potential at Y is 2.0 V.

(2)

.....

.....

.....

.....

Energy stored = ...

(Total for question = 5 marks)

Q15.

A capacitor is charged and then discharged through a resistor of resistance *R*.
As the capacitor discharges, the maximum current is 5 mA and the time for the current to fall to 2.5 mA is 6 s.

The experiment is repeated using the same charging potential difference but a lower value of *R*.

Select the row of the table that shows possible values of current and time.

	Maximum current / mA	Time for current to halve / s
☒ A	3	4
☒ B	3	8
☒ C	7	4
☒ D	7	8

(Total for question = 1 mark)

Q16.

A capacitor of capacitance *C* is charged to a potential difference *V* by a power supply.
The energy stored on the charged capacitor is *W*.

What would be the energy stored if the potential difference were 2*V*?

(1)

☐ **A** $\frac{W}{4}$

☐ **B** $\frac{W}{2}$

☐ **C** $2W$

☐ **D** $4W$

(Total for question = 1 mark)

Mark Scheme - Capacitance

Q1.

Question Number	Answer	Mark
(a)	Use of $C=Q/V$ (1) V= 15 V (1) Use of $W = QV/2$ **Or** $W = CV^2/2$ **Or** $W = Q^2/2C$ (1) $W = 2.5 \times 10^{-5}$ J (1) (candidates who use 6.6×10^{-6} C can only score MP1 and MP3) Example of calculation $V = Q/C = 3.3 \times 10^{-6}$ C / 220×10^{-9} F V= 15 V $W = QV/2 = (3.3 \times 10^{-6}$ C $\times$ 15 V)/2 $W = 2.5 \times 10^{-5}$ J	4
(b)	$Q = 0.2\ Q_0$ **Or** $Q = 6.6\times 10^{-7}$ C (1) Use of $Q = Q_o\ e^{-t/RC}$ (1) $t = 7.1$ s (1) (candidates who use $Q = 0.8\ Q_0$ can only score MP2) Example of calculation $Q = 0.2\ Q_0$ $Q = Q_0\ e^{-t/RC}$ $0.2\ Q_0 = Q_0\ e^{-t/RC}$ ln (0.2) = - t/ ($20\times 10^6\ \Omega \times 220 \times 10^{-9}$ F) $t = 7.1$ s	3
(c)	**Either** refers to $W = Q^2/2C$ **Or** $W \alpha Q^2$ (1) If Q halves, $W \rightarrow Q^2/8C$ Or halving Q quarters W (1) (Since W becomes a quarter in the time for Q to half) it takes less time for the energy to halve than the charge to halve. (dependent mark on either MP1 or MP2) (1) **Or** Refers to $W = QV/2$ (1) Q and V both decrease over time (1) W will decrease faster so takes less time to half in value. (dependent mark on either MP1 or MP2) (1)	3
(d)	Synchronous readings **Or** data logger records readings at exact time **Or** voltmeter and stop watch need 2 people and data logger only one (1) More readings can be taken in a shorter time **Or** higher sampling rate (1) (treat as neutral any reference to graph plotting automatically, human reaction time or accuracy)	2
	Total for question	**12**

Q2.

Question number	Acceptable answers	Additional guidance	Mark
	Either • Use $Q = 2.6$ to read time constant from graph **(1)** **OR** draw tangent to curve at t = 0 and obtain time constant from intercept on x axis **(1)** • $t = 17 - 18$ (ms) **(1)** • Use of $T = RC$ with their T **(1)** • $C = 0.019 - 0.021$ mF **(1)** **OR** • $Q_0 = 7$ (mC) read from graph **(1)** • Any corresponding values of Q and t read from graph **(1)** • Use of $Q=Q_0 e^{-t/RC}$ with their values for Q_0, Q and t **(1)** • $C = 0.0195 - 0.0196$ mF **(1)** **OR** • $Q_0 = 7$ (mC) read from graph **(1)** • $Q=3.5$ (mC) when $T_{1/2} = 12.3$ (ms) **(1)** • Use of $T_{1/2} = RC \ln 2$ **(1)** • $C = 0.0195 - 0.0196$ mF **(1)**	Example of calculation: $T = 19$ (ms) $C = 19 \times 10^{-3}/900 =$ 0.021 mF	**4**

Q3.

Question Number	Acceptable Answer	Additional Guidance	Mark
	• Use of Q = CV (1) • Use of $Q = Q_0 e^{-t/RC}$ (1) • $Q/Q_0 = 0.01$ (1) • $t = 11.6$ ms (1) • Use of $I = \frac{Q}{t}$ (1) • $I = 12$ A (1)	Example of calculation: $Q=CV = 56 \times 10^{-6}$ F $\times$ 2500 V = 0.14 C $\ln\left(\frac{Q}{Q_0}\right) = e^{-t/RC}$ $\ln(0.01) = -\frac{t}{45\Omega \times 56 \times 10^{-6}\text{F}} \therefore t = 0.0116\text{s}$ $I = \frac{Q}{t} = \frac{0.14\text{s}}{0.0116\text{s}} = 12.1\text{A}$	**(6)**

Q4.

Question number	Acceptable answers	Additional guidance	Mark
	An explanation that makes reference to: • Electrons/charge transferred from negatively charged plate to positively charge plate through the resistor **(1)** • Hence the charge on capacitor decreases (exponentially) **(1)** • Until the charge on the capacitor equals 0/negligible **(1)**		**3**

Q5.

Question number	Acceptable answers	Additional guidance	Mark
	A		1

Q6.

Question Number	Acceptable answers	Additional guidance	Mark
	The only correct answer is C A is not correct as the increase in energy is the change in the area under the graph line : rectangle area $V_0 \times \Delta Q$ B is not correct as the increase in energy is the change in the area under the graph line : rectangle area $V_0 \times \Delta Q$ D is not correct as the increase in energy is the change in the area under the graph line : rectangle area $V_0 \times \Delta Q$		1

Q7.

Question Number	Acceptable Answers	Additional Guidance	Mark
*	This question assesses a student's ability to show a coherent and logically structured answer with linkages and fully-sustained reasoning. Marks are awarded for indicative content and for how the answer is structured and shows lines of reasoning. The following table shows how the marks should be awarded for indicative content. Number of indicative marking points seen in answer — Number of marks awarded for indicative marking points 6 — 4 5 - 4 — 3 3 - 2 — 2 1 — 1 0 — 0	Guidance on how the mark scheme should be applied: The mark for indicative content should be added to the mark for lines of reasoning. For example, an answer with five indicative marking points which is partially structured with some linkages and lines of reasoning scores 4 marks (3 marks for indicative content and 1 mark for partial structure and some linkages and lines of reasoning). If there are no linkages between points, the same five indicative marking points would yield an overall score of 3 marks (3 marks for indicative content and no marks for linkages).	

The following table shows how the marks should be awarded for structure and lines of reasoning.

	Number of marks awarded for structure of answer and sustained line of reasoning
Answer shows a coherent and logical structure with linkages and fully sustained lines of reasoning demonstrated throughout	2
Answer is partially structured with some linkages and lines of reasoning	1
Answer has no linkages between points and is unstructured	0

(6)

Indicative content

- the capacitor can be charged to a higher p.d. than that of the battery
- storing larger amount of energy on capacitor as predicted by $E = \frac{1}{2} CV^2$
- with a low resistance in the bulb the capacitor discharges rapidly
- this produces enough power, $P = W/t$ to produce the flash
- use of $T = RC$ to estimate a value for T (1 ms)
- comparison of time constant with 4 ms

Example of calculation:
$T = 6\ \Omega \times 185\ \mu\text{F} = 1.1\ \text{ms}$
Accept $5T > 4$ ms

Q8.

Question Number	Acceptable answers		Additional guidance	Mark
	• p.d. across capacitor increases **Or** p.d. across resistor decreases	(1)		4
	• p.d. across capacitor increases to 5V	(1)		
	• p.d. across resistor starts at 5V and reduces to 0V	(1)		
	• Exponentially	(1)		

Q9.

Question Number	Acceptable answers	Additional guidance	Mark
	A		1

Q10.

Question Number	Acceptable answers		Additional guidance	Mark
	• Use of $\ln V = \ln V_o - \frac{t}{RC}$ **Or** Draws initial tangent to curve and uses $T = RC$ **Or** Determines t when V has decreased to approx. 37%	(1)	Example of calculation: $ln6 = ln100 - \frac{20 \times 3600 \text{ s}}{R \times 0.1 \times 10^{-6}(\text{s})}$ $R = 2.6 \times 10^{11}\,\Omega$	5
	• Conversion hours to seconds	(1)	$2.6 \times 10^{11}\Omega = \frac{\rho \times 0.6 \times 10^{-6}\text{ m}}{5.6 \times 10^{-3}\text{ m}^2}$	
	• Calculates resistance in range 2.4×10^{11} to 2.8×10^{11} (Ω)	(1)	Resistivity = $2.4 \times 10^{15}\,\Omega$ m	
	• Use of $R = \rho l/A$	(1)	Using $T = RC$ $7 \times 3600 \text{ s} = 0.1 \times 10^{-6}\text{ F} \times R$ $R = 2.5 \times 10^{11}\,\Omega$ (allow T in range 7 – 8 hour)	
	• Resistivity in range $2.2 \times 10^{15}\,\Omega$ to $2.6 \times 10^{15}\,\Omega$ m so yes above $10^{14}\,\Omega$ m	(1)		

Q11.

Question Marks	Acceptable Answers		Additional guidance	Mark
i	• Use of $W = \frac{1}{2}CV^2$ • $W =$ 45 μJ	(1) (1)	Example of calculation $W = \frac{1}{2}40\mu F \times (1.5\ V)^2$ $W =$ 45 μJ Alt: Use $Q = CV$ then $E = QV/2$ for MP1	2
ii	• Use of $V = V_o e^{-t/RC}$ • Time = 0.14 (s)	(1) (1)	Example of calculation $0.5 = e^{-t/5000\times40\times10^{-6}}$ $\ln 0.5 = -t/0.2$ $t = 0.14$s	2
iii	• Use of speed = d/t • Speed = 3.6 ms^{-1} Allow ecf from ii	(1) (1)	Show that value gives 5.0 ms^{-1} Example of calculation $v = 0.5\text{m}/0.14\text{s}$ $= 3.6$ ms^{-1}	2
iv	• use of $s = \frac{at^2}{2}$ • s = 9 cm + comment that foil is not broken at its centre (comment consistent with calculation) Allow ecf from ii	(1) (1)	Show that value gives 0.049 m Example of calculation $s = \frac{9.81\ ms^{-2} \times 0.14^2\ s}{2} = 0.094$ m	2

Q12.

Question Number	Acceptable answers		Additional guidance	Mark
	• Time axis: one cycle = 50 OR two cycles =100 • Use of time constant = RC • Charging curve, from 25 ms to 50 ms, just about reaching 5V as shown (ecf from their T) • One corresponding discharge curve • Curve should look exponential	(1) (1) (1) (1) (1)	Example of calculation T = 1/f = 1/20 Hz = 0.050 s Two cycles = 2 × 0.050 s = 0.10 s = 100 ms Time Constant = 100 × 50 × 10^{-6} = 0.005 s In half a cycle (0.025 s) there are 0.025 s / 0.005 s = 5 Time constants Ignore anything drawn in the first half cycle 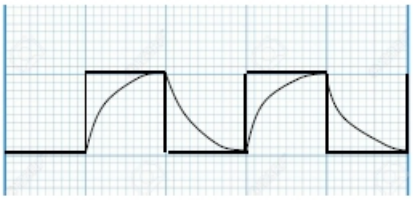 Time period should be marked 50 ms or equivalent	5

Q13.

Question Number	Acceptable answers	Additional guidance	Mark
(i)	An answer which makes reference to: • Diode only lets current through in one direction (1) • (In positive half cycle of input) D2 and D4 conduct (1) **Or** In positive half cycle of input D2 conducts **Or** (In negative half cycle of input) D3 and D1 conduct (1) **Or** negative half cycle D3 conducts • Current towards X **Or** down through *R* **Or** X to Y		3
(ii)	• Read off corresponding values of *V* and *t* from graph (1) • Use of $lnV = lnV_o - \frac{t}{RC}$ (1) • $C = 3.5 \times 10^{-5}$ F (1) range 2.7×10^{-5} F to 3.5×10^{-5} F Alternate method • Use of $I = V/R$ • Use of $Q = It$ and $C = \Delta Q/\Delta V$ • $C = 2.7 \times 10^{-5}$ F to 3.5×10^{-5} F	eg this can be any *t* (in ms) and corresponding *V* Example of calculation $ln3.5 = ln4 - \frac{0.008\text{ s}}{2200\ \Omega \times C}$ $C = 2.7 \times 10^{-5}$ F Alternate: $I = 3.8$ V / 2.2 kΩ = 1.73 mA $Q = 1.73$ mA ×8 ms = 13.8×10^{-6} C $C = 13.8 \times 10^{-6}$ C / 0.4 V = 3.4×10^{-5} F	3

Q14.

Question Number	Acceptable answers	Additional guidance	Mark
i	• Use of $\text{In}V = \text{In}V_o - \frac{t}{RC}$ (1) • Substitution $V = 2.0$ V and $V_o = 8.0$ V (1) • $t = 5.6(1)$ ms (1)	Alternative use of $V = V_o e^{-\frac{t}{RC}}$ Rearrange to In 4 = t / 2700 Ω × $1.5 \times 10^{-6} F$ Example of calculation $t = 2700\ \Omega \times 1.5 \times 10^{-6}$ F (ln 8 − In2) $t = 5.61$ ms	3
ii	• Use of $W = ½\ CV^2$ (1) • $W = 3.0 \times 10^{-6}$ J (1)	Example of calculation $W = \frac{1}{2} 1.5 \times 10^{-6}\text{F} \times 2^2\ \text{V}^2 = 3.0 \times 10^{-6}$ J	2

Q15.

Question Number	Acceptable Answer	Additional guidance	Mark
	C	7, 4	**(1)**

Q16.

Question Number	Acceptable answers	Additional guidance	Mark
	D uses $W = \frac{1}{2}CV^2$ so if V is doubled W is 4×	$4W$	1
	A divides the energy by 4 (rather than multiply) B forgets to square the potential difference and divides C forgets to square the potential difference		