Oxford Cambridge and RSA

A Level Physics A

H556/03 Unified physics

Thursday 14 June 2018 – Morning

Time allowed: 1 hour 30 minutes

You must have:
- The Data, Formulae and Relationship Booklet (sent with general stationery)

You may use:
- a scientific or graphical calculator
- a ruler (cm/mm)

First name	
Last name	

Centre number						Candidate number				

INSTRUCTIONS
- Use black ink. You may use an HB pencil for graphs and diagrams.
- Complete the boxes above with your name, centre number and candidate number.
- Answer **all** the questions.
- Write your answer to each question in the space provided. If additional space is required, use the lined page(s) at the end of this booklet. The question number(s) must be clearly shown.
- Do **not** write in the barcodes.

INFORMATION
- The total mark for this paper is **70**.
- The marks for each question are shown in brackets **[ ]**.
- Quality of extended responses will be assessed in questions marked with an asterisk (*).
- This document consists of **20** pages.

© OCR 2018 [601/4743/X]
DC (ST/SG) 154896/4
OCR is an exempt Charity

Answer **all** the questions

1 This question is about a resistance wire made of nichrome.

(a)* It is suggested that the resistance R of a length of nichrome wire varies with temperature θ in °C according to the equation

$$R = R_0 (1 + k\theta)$$

where R_0 is the resistance of the wire at 0 °C and k is a constant for the wire.

Fig. 1.1 shows a diagram of the arrangement of apparatus in an experiment to test the relationship between R and θ and to determine the value of k.

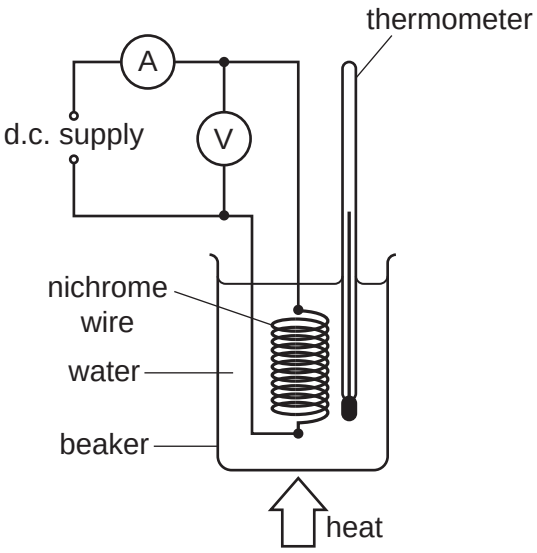

Fig. 1.1

The resistance wire is coiled and placed in a water bath.

Describe how you would carry out the experiment, analyse the data to verify the relationship between R and θ and determine a value for k.
In your description, state any precautions that you would take to improve the accuracy and precision of the measurements.

© OCR 2018

..... [6]

Question 1 is continued on page 4.

© OCR 2018

(b) A student is investigating a 230 V, 1.0 kW heating element. The heating element is shown in Fig. 1.2.

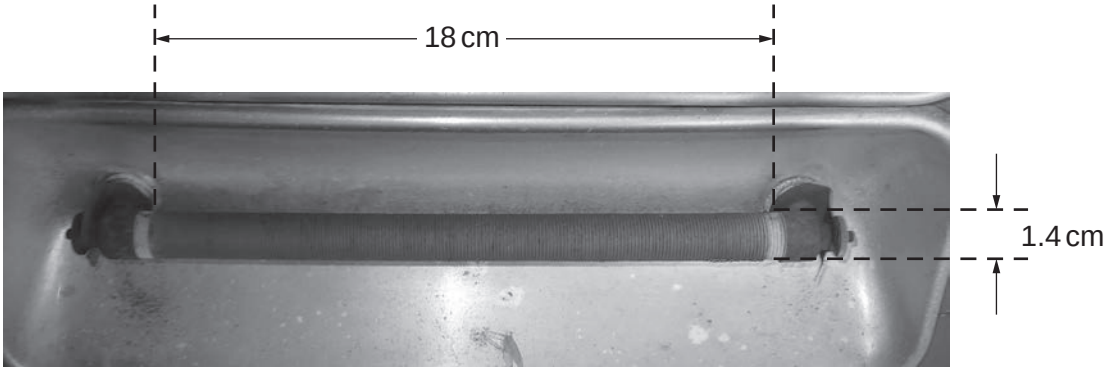

Fig. 1.2

A length of nichrome wire is wound in a spiral groove along 18 cm of a ceramic cylinder of diameter 1.4 cm. The distance between the centres of adjacent turns of the wire is 1.5 mm.

The numbers labelling the reels of loose wire on the laboratory shelf are the *imperial standard wire gauge* (swg). The student wishes to find out which reel holds the same wire as that wound on the heating element of Fig. 1.2.

The book of data gives the following information:

resistivity of nichrome at operating temperature = $1.1 \times 10^{-6}\,\Omega\,\text{m}$

swg	24	26	28	30	32
diameter of wire / 10^{-3} m	0.56	0.46	0.38	0.32	0.27
cross-sectional area / 10^{-6} m^2	0.25	0.16	0.11	0.08	0.06

(i) Show that the resistance of the nichrome wire wound on the ceramic cylinder is 53 Ω.

[2]

© OCR 2018

(ii) Show that the length of wire wound on the heating element is 5.3 m.

[2]

(iii) Use the information given in **(i)** and **(ii)** to determine the swg number of the wire used as the heating element.

swg number = ... **[3]**

© OCR 2018

2 The 500 m tall Taipei 101 tower is shown in Fig. 2.1. The tower has a massive sphere suspended across five floors near the top of the building to dampen down movement of the tower in high winds and earthquakes. The sphere is connected to pistons (not shown) which drive oil through small holes providing damping. The vibration energy of the sphere is converted to thermal energy.

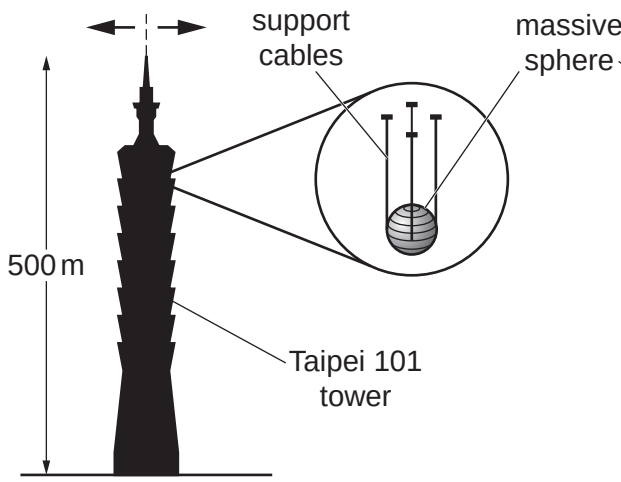

Fig. 2.1

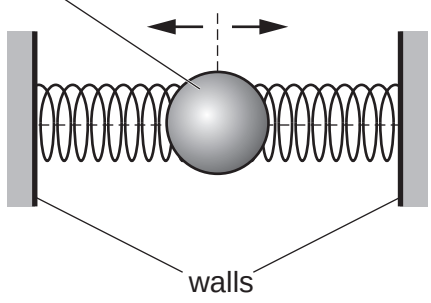

Fig. 2.2

Fig. 2.2 models the damper system as the sphere held between two springs. The movement of the walls of the tower forces the sphere to oscillate in **simple harmonic motion**.

In the strongest wind, the natural frequency of the oscillations of the tower is 0.15 Hz and the maximum acceleration of the sphere is $0.050\,\mathrm{m\,s^{-2}}$.

(a) Calculate the maximum displacement of the sphere in the strongest wind.

maximum displacement = ... m **[3]**

(b) Explain why the natural frequency of the damper system must be about 0.15 Hz.

.....

.....

.....

..... **[2]**

© OCR 2018

(c) The acceleration a of the sphere is given by the equation

$$a = -\left(\frac{k}{m}\right)x$$

where k is the force constant of the spring combination, x is the displacement of the sphere and m is the mass of the sphere.

The mass of the sphere is 6.6×10^5 kg. The natural frequency of the oscillations of the sphere is 0.15 Hz.

(i) Show that the force constant k of the spring combination is about $6 \times 10^5\,\mathrm{N\,m^{-1}}$.

[3]

(ii) The S-wave of an earthquake causes a sudden movement of the building displacing the sphere 0.71 m from its equilibrium position relative to the building.

Use your answer in **(i)** to calculate the energy transferred to the springs of the damper system.

energy transferred = ... J **[2]**

© OCR 2018

3 A binary star is a pair of stars which move in circular orbits around their common centre of mass.

In this question consider the stars to be point masses situated at their centres.

(a) Fig. 3.1 shows a binary star where the mass of each star is *m*. The stars move in the same circular orbit.

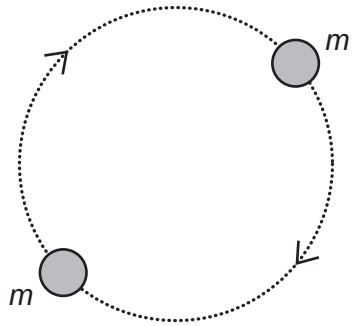

Fig. 3.1

(i) Explain why the stars of equal mass must always be diametrically opposite as they travel in the circular orbit.

.....

.....

.....

.....

..... **[2]**

(ii) The centres of the two stars are separated by a distance of $2R$ equal to 3.6×10^{10} m, where R is the radius of the orbit. The stars have an orbital period T of 20.5 days. The mass of each star is given by the equation

$$m = \frac{16\pi^2 R^3}{GT^2}$$

where G is the gravitational constant.

Calculate the mass m of each star in terms of the mass $M_\odot$ of the Sun.

1 day = 86400 s
$M_\odot = 2.0 \times 10^{30}$ kg

m = ... $M_\odot$ **[3]**

© OCR 2018

(iii) The stars are viewed from Earth in the plane of rotation.
The stars are observed using light that has wavelength of 656 nm in the laboratory. The observed light from the stars is Doppler shifted.

Calculate the maximum change in the observed wavelength $\Delta\lambda$ of this light from the orbiting stars. Give your answer in nm.

$\Delta\lambda$ = ... nm **[2]**

(b) Fig. 3.2 shows a binary star where the masses of the stars are 4*m* and *m*.

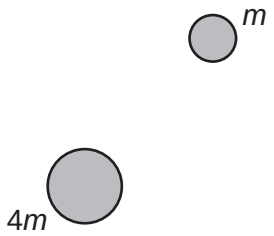

Fig. 3.2

(i) The centre of mass of the binary star lies at the surface of the star of mass 4*m*. Draw on **Fig. 3.2** two circles to represent the orbits of **both** stars. **[1]**

(ii) Explain why the smaller mass star travels faster in its orbit than the larger mass star.

.....

.....

.....

.....

..... **[2]**

© OCR 2018

4 Fig. 4.1 shows an arrangement used by a student to determine the acceleration of free fall.

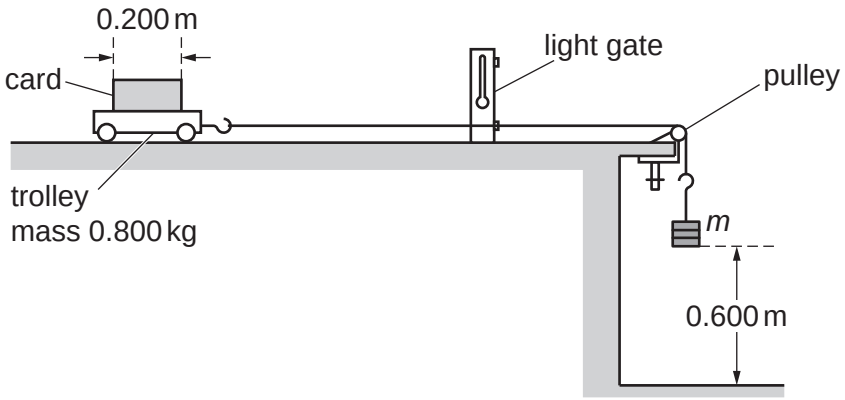

Fig. 4.1

A trolley is attached to a variable mass *m* by a string which passes over a pulley.

The mass *m* is released from rest and falls through a fixed height of 0.600 m accelerating the trolley of mass 0.800 kg. When the mass *m* hits the floor, the trolley then continues to move at a **constant** velocity *v*.

This constant velocity *v* is determined by measuring the time *t* for the card of length 0.200 m to pass fully through a light gate connected to a timer.

Frictional forces on the trolley and the falling mass *m* are negligible.

(a) Show that the relationship between *v* and *m* is

$$v^2 = \frac{1.20mg}{(m + 0.800)}$$

where *g* is the acceleration of free fall.

[2]

(b) The student records the information from the experiment in a table. The column headings and just the last row for *m* = 0.600 kg from this table are shown below.

m / kg	t / 10^{-3} s	$\frac{m}{(m + 0.800)}$	v / m s^{-1}	v^2 / m^2 s^{-2}
0.600	90 ± 2	0.429	2.22 ± 0.05	

(i) Complete the missing value of v^2 in the table including the absolute uncertainty. **[2]**

© OCR 2018

(ii) Fig. 4.2 shows some of the data points plotted by the student. Plot the missing data for m = 0.600 kg on Fig. 4.2 and draw the straight line of best fit. **[2]**

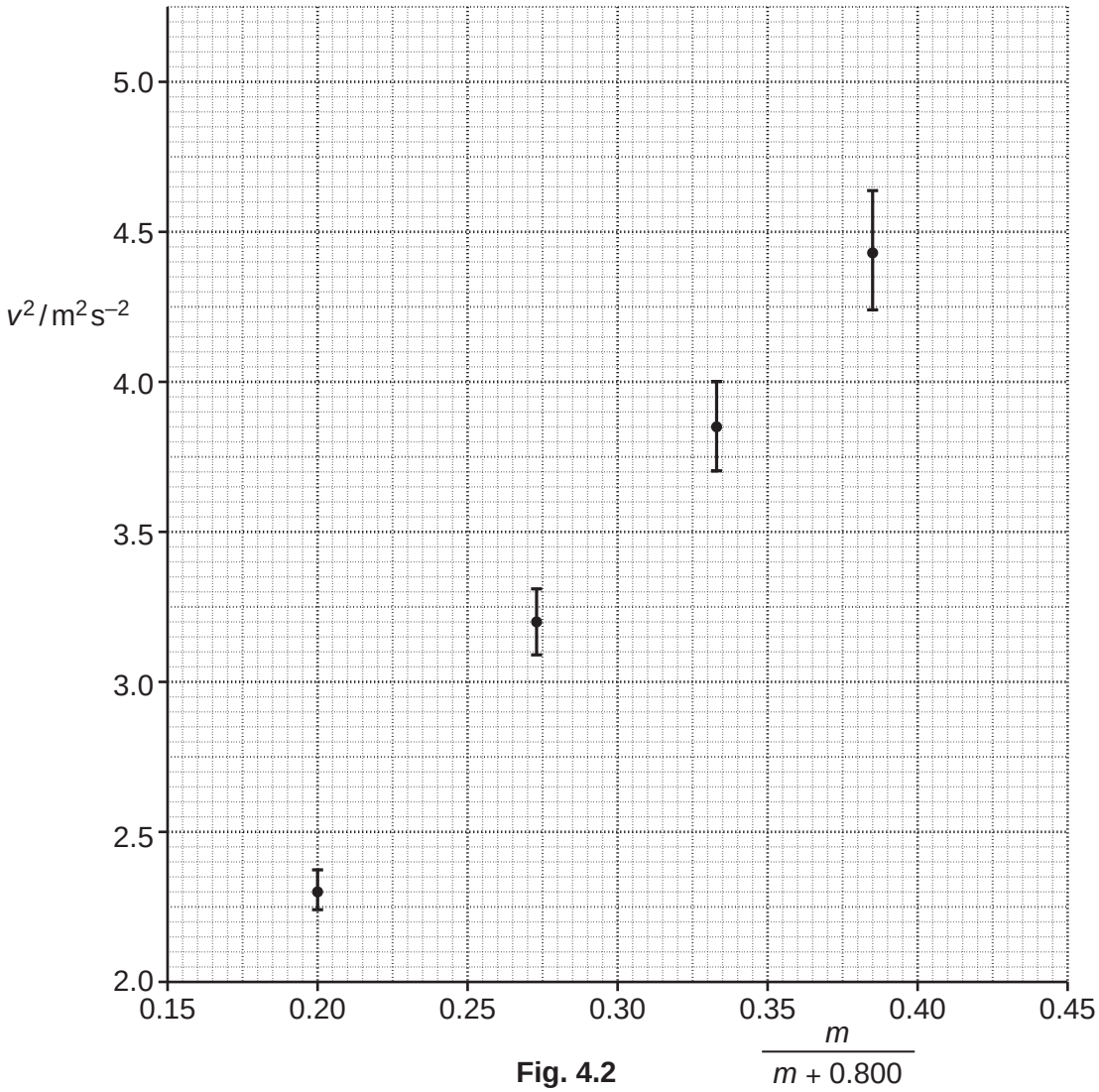

Fig. 4.2

(c) **(i)** Use the equation given in **(a)** to show that the gradient of the graph of v^2 against $\frac{m}{(m + 0.800)}$ is equal to 1.20 g.

[1]

(ii) Assume that the best-fit straight line through the data points gives 9.5 m s^{-2} for the experimental value of g. Draw a worst-fit line through the data points on Fig. 4.2 and determine the absolute uncertainty in the value for g.

absolute uncertainty = ± ..... m s^{-2} **[4]**

© OCR 2018

Question 4 is continued on page 12.

(d) It is suspected that the card on the trolley did not pass at right angles through the light beam.

Discuss, without doing any calculations, the effect this may have on the experimental value for the acceleration of free fall *g*.

.....

.....

.....

.....

.....

.....

.....

.....

..... **[4]**

© OCR 2018

5 **(a)** A magnet rotates inside a shaped soft iron core. A coil is wrapped around the iron core as shown in Fig. 5.1. The coil is connected to an oscilloscope.

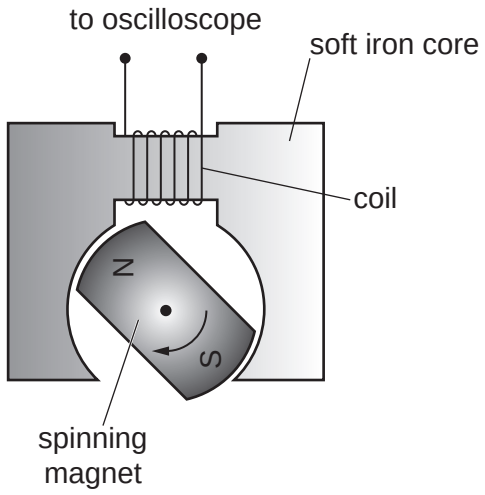

Fig. 5.1

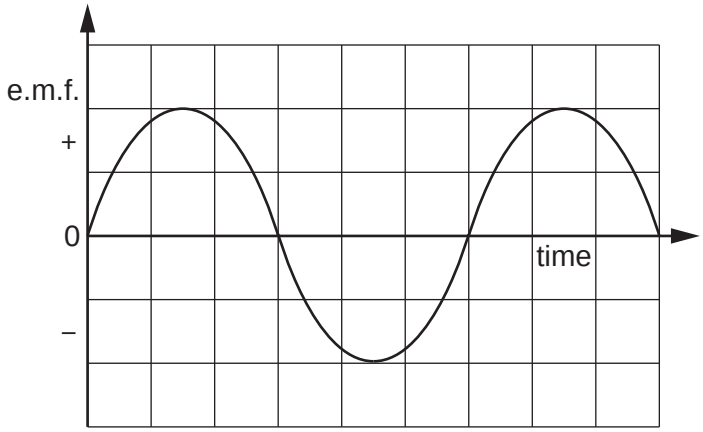

Fig. 5.2

The spinning magnet induces an e.m.f. in the coil. A graph of the e.m.f. displayed on the oscilloscope screen is shown in Fig. 5.2.

(i) Explain the shape of the graph in terms of the magnetic flux linking the coil.

.....

.....

.....

..... **[2]**

(ii) On Fig. 5.3 sketch a graph of the magnetic flux linkage of the coil against time. The variation of the induced e.m.f. across the coil is shown as a dotted line. **[1]**

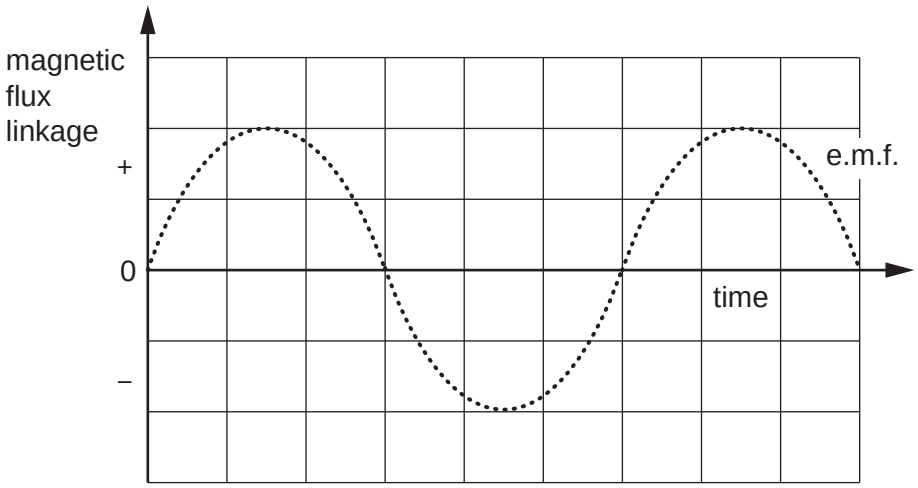

Fig. 5.3

Question 5 is continued on page 14.

© OCR 2018

(iii) The coil shown in Fig. 5.1 has 150 turns. The maximum induced e.m.f. V_0 across the coil is 1.2 V when the magnet is rotating at 24 revolutions per second.

Calculate the maximum **magnetic flux** through the coil using the equation

$$V_0 = 2\pi \times \text{(frequency)} \times \text{(maximum magnetic flux linkage)}$$

Give a unit with your answer.

maximum flux = ... unit ..... **[2]**

(b)* A student is given a transformer with coils **X** and **Y**, as shown in Fig. 5.4.

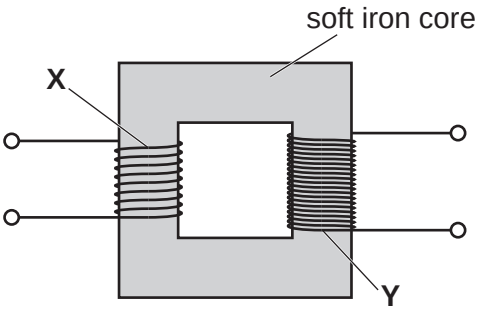

Fig. 5.4

The student is intending to investigate how the maximum induced e.m.f. V_0 in coil **Y** depends on the frequency *f* of the alternating current in coil **X**.

The changing magnetic flux density in coil **X** induces an e.m.f. in coil **Y**. Faraday's law indicates that the maximum induced e.m.f. V_0 should be directly proportional to *f*.

Describe how you would investigate the suggested relationship between V_0 and *f* in the laboratory using these coils. In your description include all of the equipment used and how you would analyse the data collected.

Use the space below to draw a suitable diagram.

© OCR 2018

..... **[6]**

© OCR 2018

6 Fig. 6.1 shows a single photomultiplier tube and its internal components. The tube can detect gamma photons in high-energy physics experiments.
A single gamma photon incident on the scintillator crystal generates many photons of blue light. These visible light photons travel to the photocathode where they are converted into photoelectrons. The number of electrons is then multiplied in the photomultiplier tube with the help of electrodes called dynodes. A short pulse of electric current is produced at the output end of the photomultiplier tube.

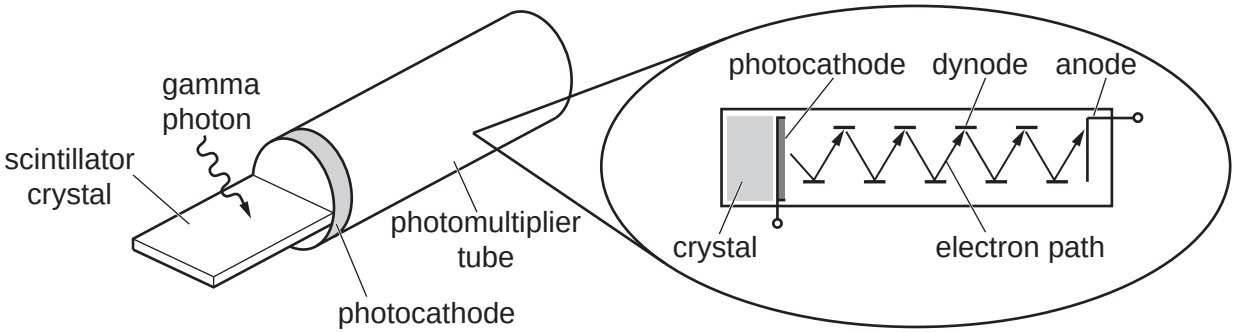

Fig. 6.1

(a) Fig. 6.2 shows a section through the scintillator crystal in air.

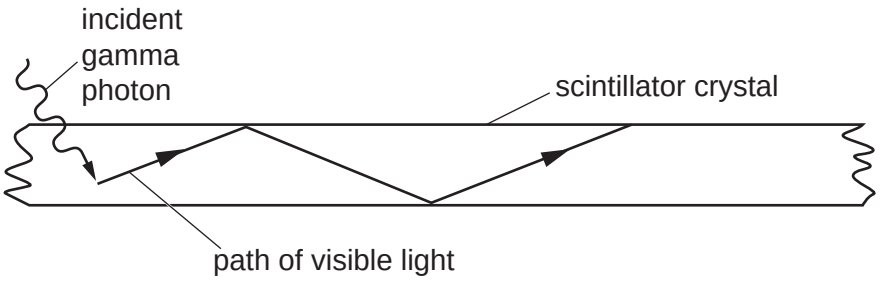

Fig. 6.2

(i) The refractive index of the scintillator crystal for visible light is 1.69. The refractive index of air is 1.00. Calculate the critical angle *C* for this crystal.

C = ...° **[2]**

(ii) Explain why the visible light inside the scintillator crystal follows the path shown in Fig. 6.2.

.....

.....

.....

..... **[2]**

© OCR 2018

(b) A high energy gamma photon passing through the scintillator crystal converts some of its energy into visible light photons of mean wavelength 450 nm.

Show that the energy of a single photon of wavelength 450 nm is less than 3 eV.

[3]

(c) The photocathode is coated with potassium which has a work function of 2.3 eV. Each emitted photoelectron is accelerated by a potential difference of 100 V between the photocathode and a metal plate, called the first dynode.

(i) Show that the maximum kinetic energy of an emitted electron at the photocathode is very small compared to its kinetic energy of 100 eV at the first dynode.

[1]

(ii) 2000 photoelectrons are released from the photocathode. Each photoelectron has enough energy to release four electrons from the first dynode at the collision. These four electrons are then accelerated to the next dynode where the process is repeated. There are 9 dynodes in the photomultiplier tube. The total number of electrons collected at the anode for each photoelectron is 4^9.

The pulse of electrons at the anode lasts for a time of 2.5×10^{-9} s.

Calculate the average current due to this pulse.

average current = ... A **[3]**

END OF QUESTION PAPER

© OCR 2018

ADDITIONAL ANSWER SPACE

If additional space is required, you should use the following lined page(s). The question number(s) must be clearly shown in the margin(s).

© OCR 2018

© OCR 2018

OCR
Oxford Cambridge and RSA

Copyright Information

OCR is committed to seeking permission to reproduce all third-party content that it uses in its assessment materials. OCR has attempted to identify and contact all copyright holders whose work is used in this paper. To avoid the issue of disclosure of answer-related information to candidates, all copyright acknowledgements are reproduced in the OCR Copyright Acknowledgements Booklet. This is produced for each series of examinations and is freely available to download from our public website (www.ocr.org.uk) after the live examination series.

If OCR has unwittingly failed to correctly acknowledge or clear any third-party content in this assessment material, OCR will be happy to correct its mistake at the earliest possible opportunity.

For queries or further information please contact the Copyright Team, First Floor, 9 Hills Road, Cambridge CB2 1GE.

OCR is part of the Cambridge Assessment Group; Cambridge Assessment is the brand name of University of Cambridge Local Examinations Syndicate (UCLES), which is itself a department of the University of Cambridge.

© OCR 2018