Centre No.						Paper Reference							Surname	Initial(s)
Candidate No.						6	6	8	0	/	0	1	Signature	

Paper Reference(s)

6680/01

Edexcel GCE

Mechanics M4

Advanced/Advanced Subsidiary

Monday 15 June 2009 – Afternoon

Time: 1 hour 30 minutes

Examiner's use only

Team Leader's use only

Question Number	Leave Blank
1	
2	
3	
4	
5	
6	
Total	

Materials required for examination
Mathematical Formulae (Orange or Green)

Items included with question papers
Nil

Candidates may use any calculator allowed by the regulations of the Joint Council for Qualifications. Calculators must not have the facility for symbolic algebra manipulation, differentiation and integration, or have retrievable mathematical formulae stored in them.

Instructions to Candidates

In the boxes above, write your centre number, candidate number, your surname, initials and signature.
Check that you have the correct question paper.
Answer ALL the questions. You must write your answers to each question in the space following the question.
Whenever a numerical value of g is required, take $g = 9.8$ m s^{-2}.
When a calculator is used, the answer should be given to an appropriate degree of accuracy.

Information for Candidates

A booklet 'Mathematical Formulae and Statistical Tables' is provided.
Full marks may be obtained for answers to ALL questions.
The marks for individual questions and the parts of questions are shown in round brackets: e.g. **(2)**.
There are 6 questions in this question paper. The total mark for this paper is 75.
There are 24 pages in this question paper. Any blank pages are indicated.

Advice to Candidates

You must ensure that your answers to parts of questions are clearly labelled.
You should show sufficient working to make your methods clear to the Examiner.
Answers without working may not gain full credit.

This publication may be reproduced only in accordance with Edexcel Limited copyright policy.
©2009 Edexcel Limited.

Printer's Log. No.
M34276A
W850/R6680/57570 3/3/3/3

M 3 4 2 7 6 A 0 1 2 4

Turn over

edexcel
advancing learning, changing lives

Leave blank

1.

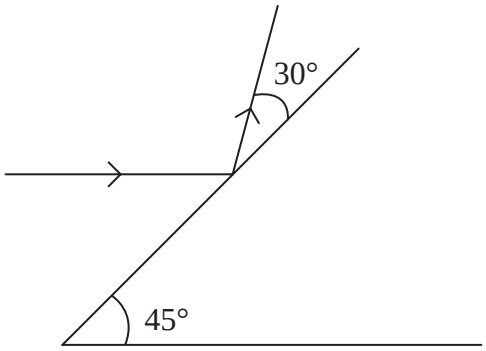

Figure 1

A fixed smooth plane is inclined to the horizontal at an angle of 45°. A particle P is moving horizontally and strikes the plane. Immediately before the impact, P is moving in a vertical plane containing a line of greatest slope of the inclined plane. Immediately after the impact, P is moving in a direction which makes an angle of 30° with the inclined plane, as shown in Figure 1.

Find the fraction of the kinetic energy of P which is lost in the impact.

(6)

Leave blank

2. At time $t = 0$, a particle P of mass m is projected vertically upwards with speed $\sqrt{\frac{g}{k}}$, where k is a constant. At time t the speed of P is v. The particle P moves against air resistance whose magnitude is modelled as being mkv^2 when the speed of P is v. Find, in terms of k, the distance travelled by P until its speed first becomes half of its initial speed.

(9)

Leave blank

Question 2 continued

Leave blank

3. At noon a motorboat P is 2 km north-west of another motorboat Q. The motorboat P is moving due south at 20 m s^{-1}. The motorboat Q is pursuing motorboat P at a speed of 12 m s^{-1} and sets a course in order to get as close to motorboat P as possible.

(a) Find the course set by Q, giving your answer as a bearing to the nearest degree.
(4)

(b) Find the shortest distance between P and Q.
(3)

(c) Find the distance travelled by Q from its position at noon to the point of closest approach.
(5)

Leave blank

Question 3 continued

Leave blank

4.

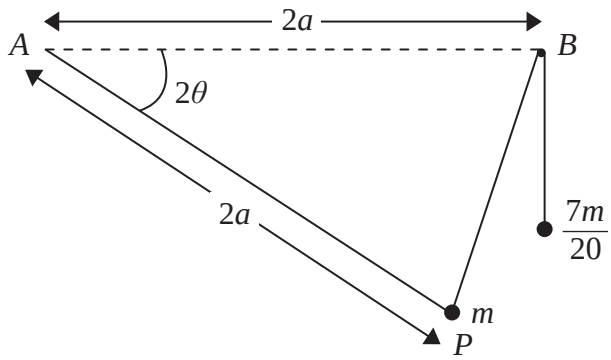

Figure 2

A light inextensible string of length $2a$ has one end attached to a fixed point A. The other end of the string is attached to a particle P of mass m. A second light inextensible string of length L, where $L > \frac{12a}{5}$, has one of its ends attached to P and passes over a small smooth peg fixed at a point B. The line AB is horizontal and $AB = 2a$. The other end of the second string is attached to a particle of mass $\frac{7}{20}m$, which hangs vertically below B, as shown in Figure 2.

(a) Show that the potential energy of the system, when the angle $PAB = 2\theta$, is

$$\tfrac{1}{5}mga(7\sin\theta - 10\sin 2\theta) + \text{constant}.$$

(4)

(b) Show that there is only one value of $\cos\theta$ for which the system is in equilibrium and find this value.

(8)

(c) Determine the stability of the position of equilibrium.

(4)

M 3 4 2 7 6 A 0 1 2 2 4

Leave blank

Question 4 continued

Leave blank

5. Two small smooth spheres A and B, of mass 2 kg and 1 kg respectively, are moving on a smooth horizontal plane when they collide. Immediately before the collision the velocity of A is $(\mathbf{i} + 2\mathbf{j})$ m s^{-1} and the velocity of B is $-2\mathbf{i}$ m s^{-1}. Immediately after the collision the velocity of A is $\mathbf{j}$ m s^{-1}.

(a) Show that the velocity of B immediately after the collision is $2\mathbf{j}$ m s^{-1}.

(3)

(b) Find the impulse of B on A in the collision, giving your answer as a vector, and hence show that the line of centres is parallel to $\mathbf{i} + \mathbf{j}$.

(4)

(c) Find the coefficient of restitution between A and B.

(6)

Leave blank

Question 5 continued

Leave blank

6. A light elastic spring AB has natural length $2a$ and modulus of elasticity $2mn^2a$, where n is a constant. A particle P of mass m is attached to the end A of the spring. At time $t = 0$, the spring, with P attached, lies at rest and unstretched on a smooth horizontal plane. The other end B of the spring is then pulled along the plane in the direction AB with constant acceleration f. At time t the extension of the spring is x.

(a) Show that $$\frac{d^2x}{dt^2} + n^2x = f.$$ **(6)**

(b) Find x in terms of n, f and t. **(8)**

Hence find

(c) the maximum extension of the spring, **(3)**

(d) the speed of P when the spring first reaches its maximum extension. **(2)**

Leave blank

Question 6 continued