January 2008

| Centre No. | | | | | | Paper Reference | | | | | | | Surname | Initial(s) |
|---|---|---|---|---|---|---|---|---|---|---|---|---|---|---|
| Candidate No. | | | | | | 6 | 6 | 7 | 8 | / | 0 | 1 | Signature | |

Paper Reference(s)

**6678/01**

# Edexcel GCE

## Mechanics M2

## Advanced/Advanced Subsidiary

Thursday 24 January 2008 – Morning

Time: 1 hour 30 minutes

Examiner's use only

Team Leader's use only

| Question Number | Leave Blank |
|---|---|
| 1 | |
| 2 | |
| 3 | |
| 4 | |
| 5 | |
| 6 | |
| 7 | |
| Total | |

**Materials required for examination**
Mathematical Formulae (Green)

**Items included with question papers**
Nil

**Candidates may use any calculator allowed by the regulations of the Joint Council for Qualifications. Calculators must not have the facility for symbolic algebra manipulation, differentiation and integration, or have retrievable mathematical formulae stored in them.**

### Instructions to Candidates

In the boxes above, write your centre number, candidate number, your surname, initials and signature.
Check that you have the correct question paper.
You must write your answers to each question in the space following the question.
Whenever a numerical value of $g$ is required, take $g = 9.8 \text{ m s}^{-2}$.
When a calculator is used, the answer should be given to an appropriate degree of accuracy.

### Information for Candidates

A booklet 'Mathematical Formulae and Statistical Tables' is provided.
Full marks may be obtained for answers to ALL questions.
The marks for individual questions and the parts of questions are shown in round brackets: e.g. **(2)**.
There are 7 questions in this question paper. The total mark for this paper is 75.
There are 24 pages in this question paper. Any blank pages are indicated.

### Advice to Candidates

You must ensure that your answers to parts of questions are clearly labelled.
You should show sufficient working to make your methods clear to the Examiner.
Answers without working may not gain full credit.

This publication may be reproduced only in accordance with Edexcel Limited copyright policy.
©2008 Edexcel Limited.

Printer's Log. No.
N25252A
W850/R6678/57570 3/3/3/3

N 2 5 2 5 2 A 0 1 2 4

*Turn over*

edexcel
advancing learning, changing lives

Leave blank

**1.** A parcel of mass 2.5 kg is moving in a straight line on a smooth horizontal floor. Initially the parcel is moving with speed 8 m $s^{-1}$. The parcel is brought to rest in a distance of 20 m by a constant horizontal force of magnitude $R$ newtons. Modelling the parcel as a particle, find

(a) the kinetic energy lost by the parcel in coming to rest,

**(2)**

(b) the value of $R$.

**(3)**

Leave blank

**2.** At time $t$ seconds ($t \geqslant 0$), a particle $P$ has position vector $\mathbf{p}$ metres, with respect to a fixed origin $O$, where

$$\mathbf{p} = (3t^2 - 6t + 4)\mathbf{i} + (3t^3 - 4t)\mathbf{j}.$$

Find

(a) the velocity of $P$ at time $t$ seconds,

**(2)**

(b) the value of $t$ when $P$ is moving parallel to the vector $\mathbf{i}$.

**(3)**

When $t = 1$, the particle $P$ receives an impulse of $(2\mathbf{i} - 6\mathbf{j})$ N s. Given that the mass of $P$ is 0.5 kg,

(c) find the velocity of $P$ immediately after the impulse.

**(4)**

Leave blank

**3.** A car of mass 1000 kg is moving at a constant speed of 16 m s$^{-1}$ up a straight road inclined at an angle $\theta$ to the horizontal. The rate of working of the engine of the car is 20 kW and the resistance to motion from non-gravitational forces is modelled as a constant force of magnitude 550 N.

(a) Show that $\sin\theta = \frac{1}{14}$.

**(5)**

When the car is travelling up the road at 16 m s$^{-1}$, the engine is switched off. The car comes to rest, without braking, having moved a distance $y$ metres from the point where the engine was switched off. The resistance to motion from non-gravitational forces is again modelled as a constant force of magnitude 550 N.

(b) Find the value of $y$.

**(4)**

Leave blank

**4.**

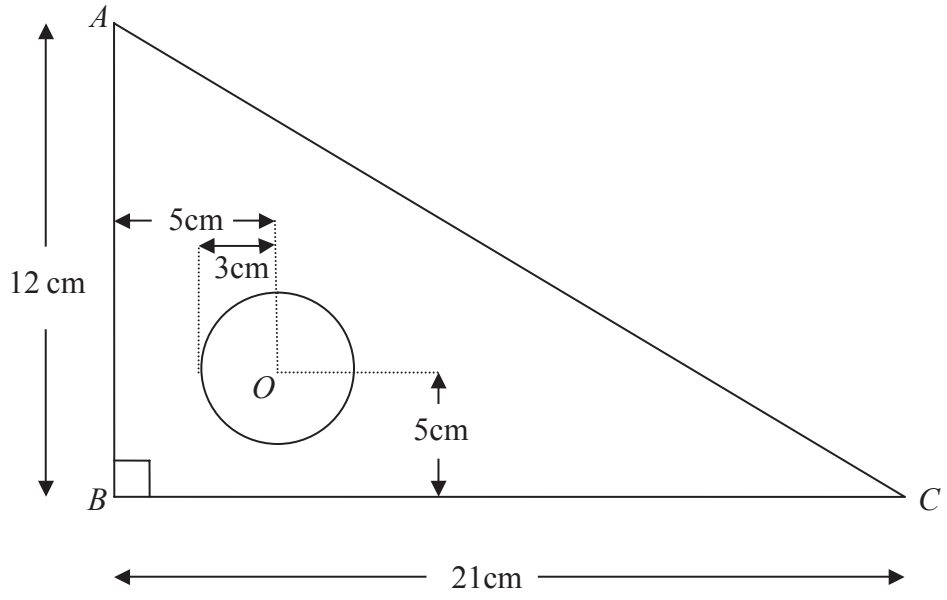


**Figure 1**

A set square $S$ is made by removing a circle of centre $O$ and radius 3 cm from a triangular piece of wood. The piece of wood is modelled as a uniform triangular lamina $ABC$, with $\angle ABC = 90°$, $AB = 12$ cm and $BC = 21$ cm. The point $O$ is 5 cm from $AB$ and 5 cm from $BC$, as shown in Figure 1.

(a) Find the distance of the centre of mass of $S$ from

(i) $AB$,

(ii) $BC$.

**(9)**

The set square is freely suspended from $C$ and hangs in equilibrium.

(b) Find, to the nearest degree, the angle between $CB$ and the vertical.

**(3)**



N 2 5 2 5 2 A 0 8 2 4

Leave blank

**Question 4 continued**

Leave blank

**Question 4 continued**

Leave blank

**5.**

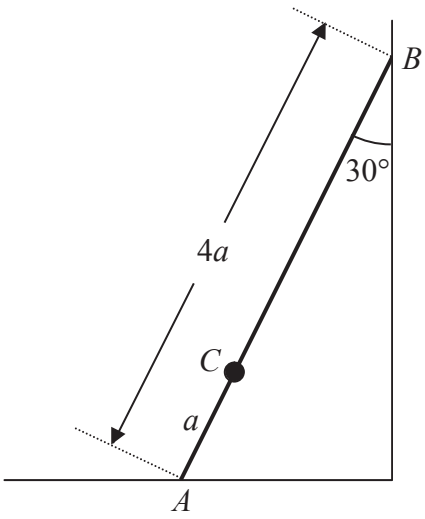


**Figure 2**

A ladder $AB$, of mass $m$ and length $4a$, has one end $A$ resting on rough horizontal ground. The other end $B$ rests against a smooth vertical wall. A load of mass $3m$ is fixed on the ladder at the point $C$, where $AC = a$. The ladder is modelled as a uniform rod in a vertical plane perpendicular to the wall and the load is modelled as a particle. The ladder rests in limiting equilibrium making an angle of 30° with the wall, as shown in Figure 2.

Find the coefficient of friction between the ladder and the ground.

**(10)**



N 2 5 2 5 2 A 0 1 2 2 4

Leave blank

**Question 5 continued**

Leave blank

**6.**

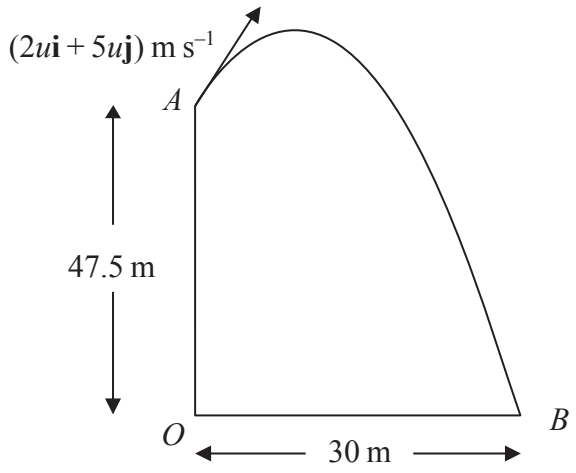


**Figure 3**

[*In this question, the unit vectors* **i** *and* **j** *are in a vertical plane,* **i** *being horizontal and* **j** *being vertical.*]

A particle $P$ is projected from the point $A$ which has position vector $47.5\mathbf{j}$ metres with respect to a fixed origin $O$. The velocity of projection of $P$ is $(2u\mathbf{i} + 5u\mathbf{j})$ m s$^{-1}$. The particle moves freely under gravity passing through the point $B$ with position vector $30\mathbf{i}$ metres, as shown in Figure 3.

(a) Show that the time taken for $P$ to move from $A$ to $B$ is 5 s.

**(6)**

(b) Find the value of $u$.

**(2)**

(c) Find the speed of $P$ at $B$.

**(5)**



N 2 5 2 5 2 A 0 1 6 2 4

Leave blank

**Question 6 continued**

Leave blank

**7.** A particle $P$ of mass $2m$ is moving with speed $2u$ in a straight line on a smooth horizontal plane. A particle $Q$ of mass $3m$ is moving with speed $u$ in the same direction as $P$. The particles collide directly. The coefficient of restitution between $P$ and $Q$ is $\frac{1}{2}$.

(a) Show that the speed of $Q$ immediately after the collision is $\frac{8}{5}u$.

**(5)**

(b) Find the total kinetic energy lost in the collision.

**(5)**

After the collision between $P$ and $Q$, the particle $Q$ collides directly with a particle $R$ of mass $m$ which is at rest on the plane. The coefficient of restitution between $Q$ and $R$ is $e$.

(c) Calculate the range of values of $e$ for which there will be a second collision between $P$ and $Q$.

**(7)**

Leave blank

**Question 7 continued**